Libec LX5 System with floor spreader

System	H38DVB(Head) + RT30B(Tripod) + SP-2B(Floor spreader) + TC-70(Carrying case)		
Payload	4 kg / 9 lb	Tilt angle	+90° /-80°
Weight	5.5 kg / 12.1 lb	Pan angle	360°
Height	① H : 1660 mm W : 710 mm (※Reference)	Counterbalance	FIX
	② H : 560 mm W : 1105 mm (〃)		---
Folded length	③ L : 855 mm (〃)	Drag mode	FIX
Camera plate (Sliding range)	Sliding plate	Ball diameter	⌀75 mm
	±40 mm / ±1.6"	Section	2STAGE (Material: Aluminum)
Plate attachment (Screw sliding range)	Type : 1/4-20UNC screw with video pin	Tripod fixation	Fixing lock knob
	52 mm / 2"	Spreader	SP-2B (Telescopic, Removable)
Spare screw	---	Pan handle	PH-5B
	---	Case material	Nylon

Remarks

■Exterior Dimensions (mm)

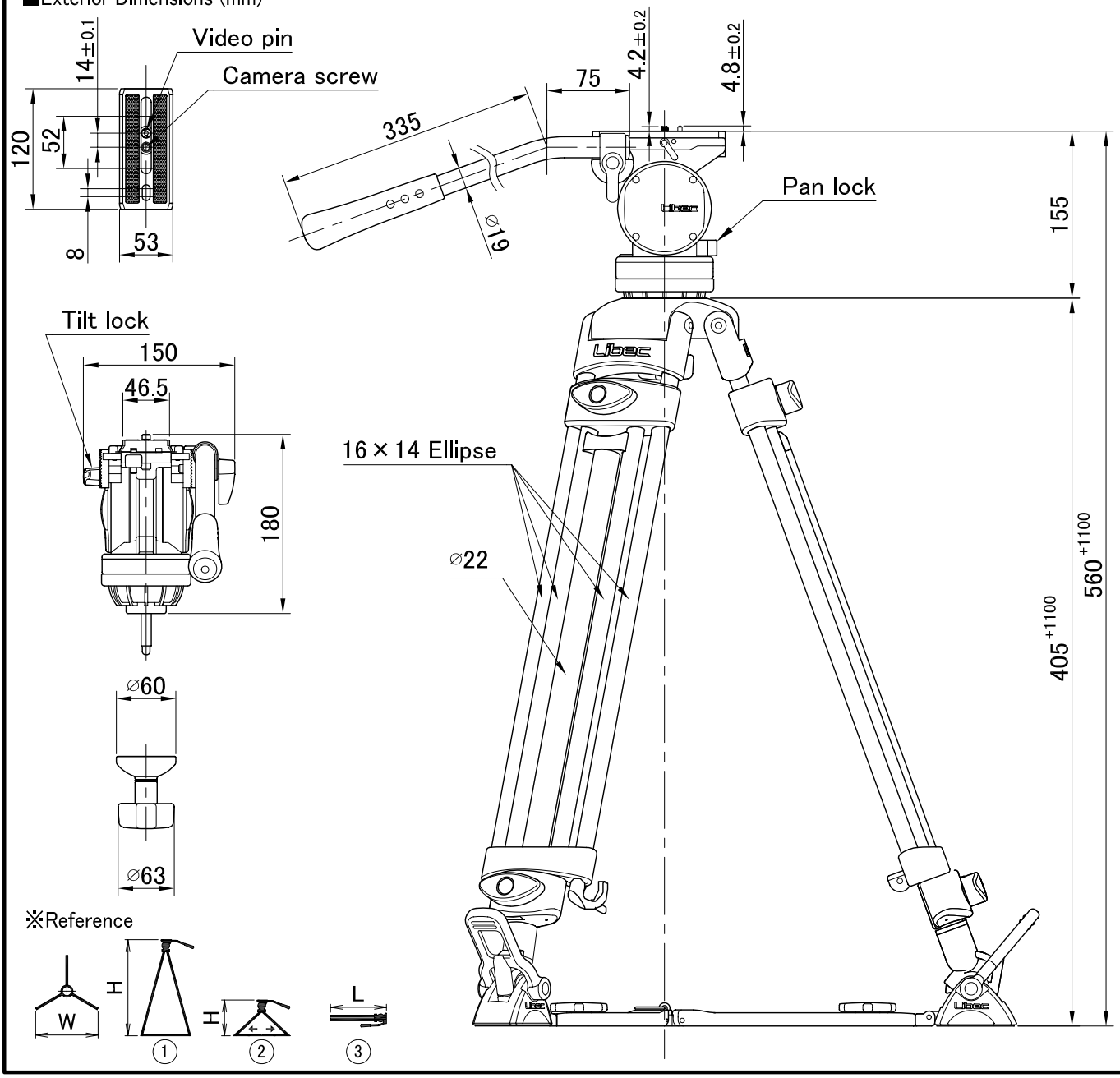

Manufacturer : HEIWA SEIKI KOGYO CO., LTD.
978-1, Nishibukuro, Yashio-City, Saitama, 340-0833 Japan TEL . +81-48-995-1301 FAX . +81-48-997-0804 http://www.libec.co.jp

1206
DWG.NO. : 50-00058-E